Peak Management at the distribution grid using High Voltage Battery Energy Storage System

Nasreddine ATTOU[1], Sid-Ahmed ZIDI[1], Samir HADJERI[1], Mohamed KHATIR[1]
[1]Electrical Engineering Department Intelligent Control & Electrical Power Systems Laboratory (ICEPS),
Djillali Liabes University Sidi Bel-Abbès, Algeria
Email : nasreddine.attou@univ-sba.dz

Abstract- Over the past decades, the development of HV battery storage systems has grown rapidly due to their versatility, high energy density, lifetime, and efficiency. These storage devices are used to solve the intermittency problems of renewable resources and to meet energy demand during peak periods. The large-scale integration of these batteries has an effective impact on the optimal performance of the power grid. In this paper, our attention is focused on the development of a peak management system using grid-connected HV storage batteries. The study developed in MATLAB/Simulink is applied to a microgrid composed of a photovoltaic system, a variable load, and a battery storage system. A peak scenario is performed with different State of Charge (SOC) values to see the behaviour of the control system in peak load reduction and maintaining safe and optimal operation. The results obtained in this study demonstrate the performance of the storage system in peak management applications resulting in a smoother load curve.

Keywords -Photovoltaic system, Power injection, Grid-tied inverter, HV Grid, P/Q control.

I. INTRODUCTION

The development of storage capacities is a necessary element in the development of an electricity network, to which they can contribute in several ways: thanks to their great flexibility and reactivity, it makes it possible to contribute punctually to the balance of the network and its stability, as an adjustment variable, in particular at peak times. This is already the main function of hydroelectric power generation units, but these capacities are limited by water stocks.

These balancing capabilities also increase the overall reliability of the grid by controlling the frequency of the transmitted power. Storage units can also be attached to renewable energy production centers to smooth out the intermittency of their production by storing electricity during periods of high production and releasing it during periods of peak consumption. As electricity users and utilities demand more efficient and reliable systems, battery storage can be expected to play a more important role. The use of batteries for energy storage for commercial or industrial purposes is likely to become an increasingly accessible and widespread practice. [1-2].

With interest in developing new storage technologies and improving existing ones, new applications of energy storage systems are emerging in a variety of job roles. The increasing integration of battery energy storage is not only leading to increased energy capacity and reliability but also promoting sustainable and resilient energy systems for the future. Many technologies have been developed for large-scale energy storage, such as pumped hydro and compressed air energy storage facilities, as well as flywheels, capacitors, and superconducting magnetic storage. Electrochemical energy storage devices offer the flexibility in terms of capacity, location, and rapid response required to meet application demands over a much wider range of functions than many other types of storage. Currently, due to the technological maturity of HV battery technology.

This storage technique has seen the most widespread use among large-scale BESS. They are motivated by the need to store a certain amount of energy and power for a specific application while respecting the limits of the technology available on the market. The main technology currently used for this purpose is the lithium-ion battery because of its high energy and power densities compared to other technologies. It is, therefore, necessary to use several battery cells to create an HV battery system to meet the requirements, it can be necessary to provide a peak power of 100 kW, for example, for electric vehicles (EVs). In general, the motivation behind

the use of high voltages for battery systems and electric powertrains is to minimize weight and costs and thus increase the range of the electric vehicle [3].

Energy storage systems can respond quickly to some operational needs of electricity transmission and distribution networks. They can provide energy for various periods of time depending on their rated capacity. Some applications require a relatively short duration of electrical discharge, such as peak loads. They can also serve as backup power plants, providing additional energy in the case of unforeseen events in the power system or rapid changes in demand. Peak shaving is one of the most popular applications of energy storage, which involves taking energy when there is a surplus of energy, generated either by renewables or baseload power plants, during off-peak hours, and feeding the stored energy back into the distribution system during peak system hours, however, reducing peak load is an important objective for all stakeholders in the power system and for the system itself.

In practice, the power generated must match the power demanded at any given time to avoid grid instability, undesirable high voltage fluctuations, and possible power cuts. However, for reasons of economic convenience, energy suppliers prefer to use lower-cost generation capacity. Therefore, the reduction of peak load decreases the use of expensive generation capacity, thus increasing the financial benefits of the supplier.

Related work

This battery storage technology has been successfully applied by various researchers in electric vehicle power systems [4, 5, 6] and in the smoothing of intermittent renewable energy production [7]. In the literature, several types of research have been developed in the field of peak load management.For example, in reference [8], UDDIN proposed a decision tree-based peak shaving algorithm for a battery energy storage system for an island microgrid. Other work [9] presented a demand side management system (DSM) that includes a photovoltaic system, a battery energy storage system (BESS), a hybrid control system to reduce peak demand, and any excess energy injected into the power grid.

In reference [10], Rahimi discusses a simple method for achieving peak load shaving using utility-owned energy storage systems. Peak load reduction.

Reference [11] proposes a better decision tree-based method for decreasing peak demand in residential distribution systems by coordinating the control of electric vehicles (EVs), photovoltaic (PV) units, and battery energy storage systems (BESS).

SHEN, Jingshuang and their collaborators presented in the paper [12] a new microgrid energy management strategy with demand response to ensure peak shaving on the grid using the peak hour discounting scheme. Various controllable devices, such as controllable loads, battery storage, and diesel generators, participate in the demand response program voluntarily in this design.

In this paper, we focus on a new application of the HV battery storage system to reduce the peak load on the grid during the day. The developed control system ensures that the storage system is flexibly and optimally discharged during peak hours to limit the power supplied by the grid. The main objective is to optimally control the BESS to smooth the peak load.

II. METHODS

System Description

The study developed in this paper is designed for a grid-connected microgrid. The microgrid (MG) consists of a photovoltaic system with a rated power of 200KW, a variable load with a rated power of 250KW, and a battery energy storage system with a capacity of 750KWh. The BESS is connected to the three-phase bi-directional inverter with a 480V AC output. The battery management system has an SOC estimation algorithm, which estimates the amount of usable electrical energy stored.

The storage system is co-connected to the 480 V voltage bus and, through a 480 V/25 KV step-up transformer, the stored energy will be used directly by the grid to limit peak power.

Figure 1 shows the structure of the studied microgrid [1,13].

Table 1 presents the parameters of the microgrid.

Table 1. Microgrid Parameters.

Symbols	Description	Value	Unit
Ppv	PV POWER	200	KW
PL	LOAD POWER	250	KW
SOC BESS max	MAXIMUM BESS SOC	95	%
SOC BESS min	MINIMUM BESS SOC	20	%
C BESS	BESS CAPACITY	750	KW
t	SIMULATION TIME	24	HH

The structure of the studied system is given in the following figure.

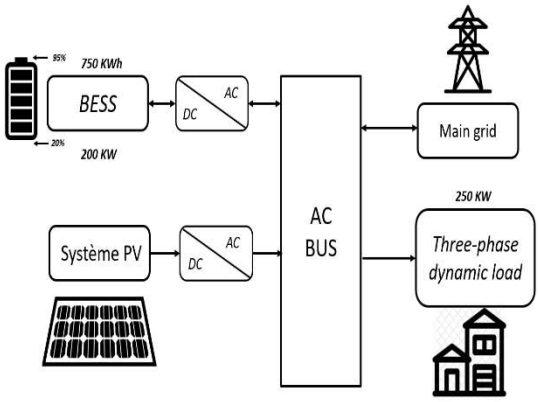

Fig. 1. Architecture of the Grid-connected BESS

Battery Energy Storage System (BESS)

Energy storage systems play a crucial role in reducing peak demand by providing energy to the load during peak hours.

With appropriate management of an 'SSEB', the excess production from renewable generation could be stored and used during peak hours or periods.

In this paper, the 'BESS' is composed of a Li-ion battery, a bi-directional AC/DC converter capable of transferring energy in both ways (Fig. 2) [1,13].

The system configuration used is given in Figure 2.

The initial state of charge (SOC) must always be above 20% in all conditions. The battery capacity used in this work is equal to 750KWh. State of charge estimation (SOC) is very useful to know the remaining capacity of a battery when it is discharged.

The state of charge of the battery is described in equation (1):

$$SOC(t) = \frac{C(t)}{C_{ref}(t)} \qquad (1)$$

$C_{ref}(t)$: Reference capacity.

$C(t)$: Battery capacity at time t.

The relationship between the battery power $P_{BAT}(t)$ and the 'SOC' of the battery can be formulated as follows:

$$SOC(t_1) = \frac{1}{C_{BAT}(t)} \int_{t_0}^{t_1} P_{BAT}(\tau) d\tau + SOC(t_0) \quad (2)$$

Where; C_{BAT} is the energy capacity of the battery (kWh), and $SOC(t_0)$ is the state of charge of the battery at the initial time t_0. For simplicity, the battery power is considered to be linear concerning the variation of the battery 'SOC', and the memory effect is ignored [13].

Control Strategy

The control strategy for charging/discharging the storage system is shown in Figure 2.

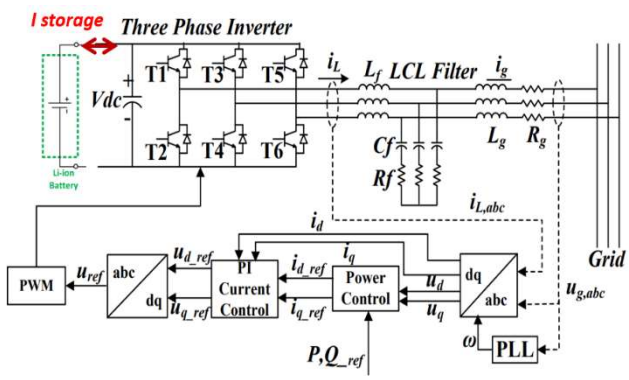

Fig. 2. Architecture of the BESS control system

The control system of the bi-directional inverter consists of a P/Q (Active Power/Reactive Power) controller with a Vdc voltage regulator, a current control loop, a PLL synchronizer, and a PWM controller [14]. The output of the inverter is filtered before being fed into the grid.

The voltage and frequency at the output of the inverter follow the U/f reference of the grid.

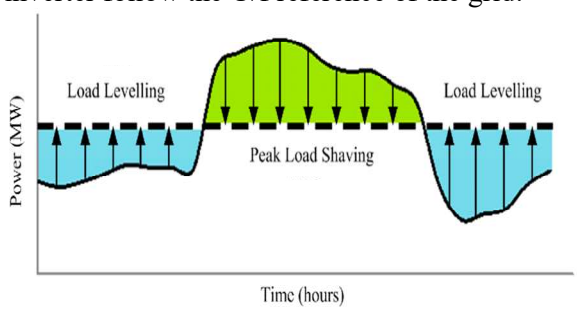

Fig. 3. Optimal peak management of the storage system.

The discharging of the battery for peak shaving and load levelling is performed by the control structure [5].

A decision tree-based algorithm is developed in the form of a condition to implement a real-time decision-making strategy.

The following figure describes the clipping and filling strategy.

In this section, we have focused on a battery energy storage system. The major goal is to come up with the best clipping approach possible in order to reduce the critical demand. The developed technique takes into consideration the state of charge, the demand of the load, and the peak amount [5,13].The detailed control flowchart is presented in Figure 4

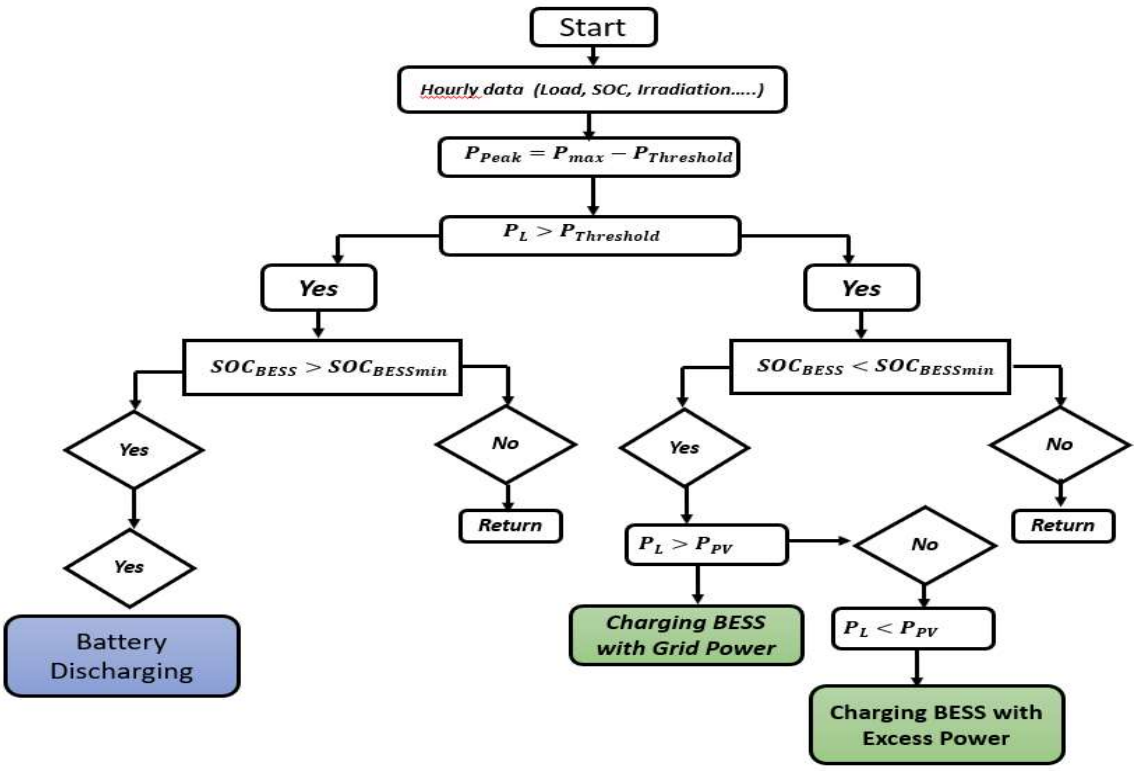

Fig. 4. Flowchart of the proposed algorithm

The BESS discharges to reduce the power delivered by the grid in case of peak consumption.

- If the state of charge of the storage system is greater than $SOC_{BESS\min}$ during peak hours, the control system schedules discharge.
- If the BESS has a $SOC_{BESS} < SOC_{BESS\min}$ and the demand is higher than the renewable generation, the control system schedules the batteries to be recharged by the grid (usually at night and during off-peak hours).
- Otherwise, the excess is used directly to recharge the batteries.

The objective of the algorithm is to smooth the load curve during peak hours, which will reduce the utility's load during peak hours while increasing the economic gain.

III. RESULTS AND DISCUSSION

The results of a Matlab/Simulink simulation of a grid-connected battery energy storage system are presented to evaluate the effectiveness of storage in reducing peak load.

The simulations were performed in discrete mode to obtain accurate results for each scenario.

The following figures show the simulation results.

Different operational scenarios are implemented to see the behaviour of the HV battery storage system in smoothing the load curve (Fig. 6 and 8) taking into account the state ofcharge 'SSEB' and the load demand.

The simulations were performed for one day to visualize the different operating conditions.

The operation of the system is divided into two scenarios:

•Scenario-1: The initial state of charge of 'SSEB'

•Scenario-2: The initial state of a load of the 'SSE

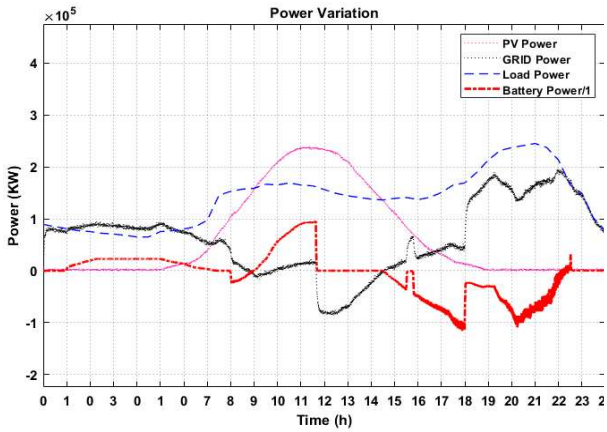

Fig. 5. Power variation of the system during a day.

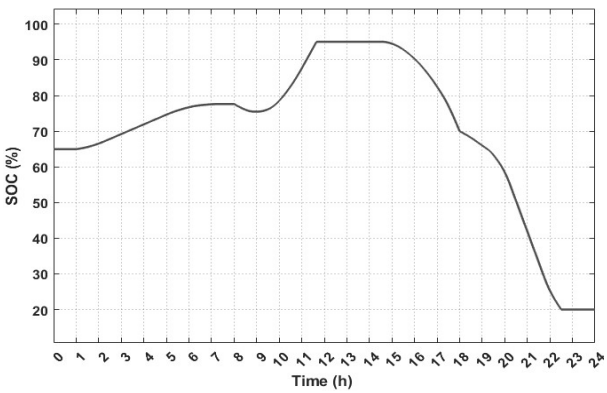

Fig. 6. Hourly variation of the SOC BESS during a day.

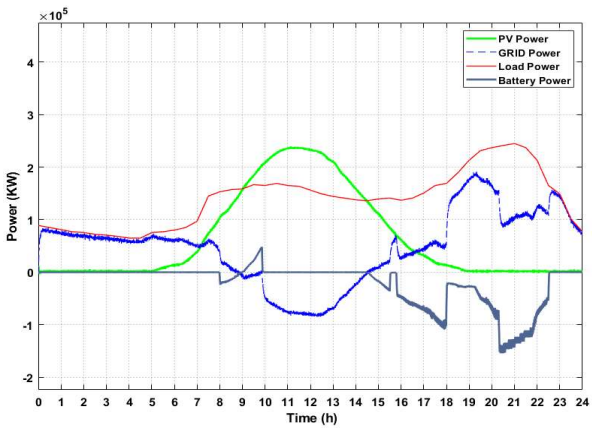

Fig. 7. Power variation of the system during a day.

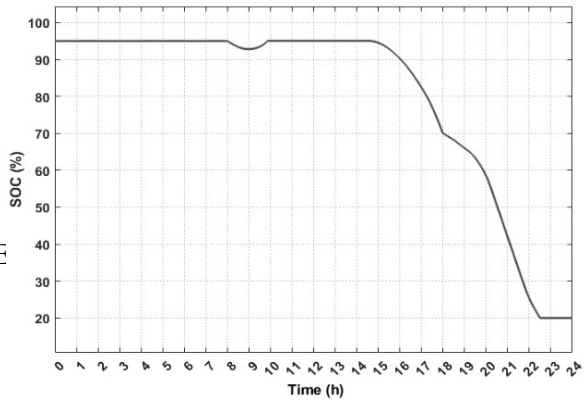

Fig. 8. Hourly variation of the SOC BESS during a day.

In both scenarios, the BESS operates during the peak hours of the grid and in the presence of renewable generation.

Figures 5 and 7 show the energy produced by the PV system, the grid, the storage system, and the power consumed by the load during a day. It can be seen that the load curve shows a consumption peak due to the amount of energy consumed by the customers.

The daily load profile varies throughout the day, with periods of high demand in the evening and morning and troughs during the night.

When the initial SOC is 65% (Fig.6), at the beginning of the day, the batteries charge up to a SOC of 80%, and then when the PV system reaches high power, the BMS allows the batteries to be charged by the excess renewable power up to its final limit 'SOCf'.

In the evening, a peak in consumption is produced, in which case the 'SSEB' starts discharging to make up the power deficit and reduce the peak power.

When the batteries are initially charged (Fig.8), all the power available in the batteries is destined to level out the evening power demand. It can be seen that the battery storage system has reduced the peak load dynamically and rapidly. We can also see a decrease in the maximum power supplied by the grid to a value of 140KW. It can be shown that BESS can respond to grid demands almost instantaneously, but also have the ability to operate for longer periods of time and have a wide range of storage and power capabilities.

IV. CONCLUSION

In this study, an HV battery energy storage system for peak shaving was developed to reduce peak demand on the distribution network. The

objective of the study was focused on using the power available in the battery to contribute to the generation of electricity during peak hours. In this way, a smoothing of the power generation curve can be envisaged to limit the use of very expensive peak power plants. The results of the work demonstrate the performance and the efficiency of the storage system in smoothing the peak demand. It can be seen that the system has reduced the peak load by half with a value of 150 kW.

References

[1] ATTOU Nasreddine. Contribution à l'étude des Réseaux Electriques Intelligents du futur (Smart-Grids). Thèse de doctorat. Faculté de génie électrique Université Djillali liabes de Sidi Bel Abbes, Algérie 2022.

[2] LAWDER, Matthew T., SUTHAR, Bharatkumar, NORTHROP, Paul WC, et al. Battery energy storage system (BESS) and battery management system (BMS) for grid-scale applications. Proceedings of the IEEE, 2014, vol. 102, no 6, p. 1014-1030.

[3] REIHANI, Ehsan, SEPASI, Saeed, ROOSE, Leon R., et al. Energy management at the distribution grid using a Battery Energy Storage System (BESS). International Journal of Electrical Power & Energy Systems, 2016, vol. 77, p. 337-344.

[4] LINSE, C. et KUHN, R. Design of high-voltage battery packs for electric vehicles. In : Advances in Battery Technologies for Electric Vehicles. Woodhead Publishing, 2015. p. 245-263.

[5] ATTOU, Nasreddine, ZIDI, Sid-Ahmed, HADJERI, Samir, et al. Improved peak shaving and valley filling using V2G technology in grid-connected Microgrid. In : 2021 Third International Conference on Transportation and Smart Technologies (TST). IEEE, 2021. p. 53-58.

[6] MAHMUD, Khizir, HOSSAIN, Md Jahangir, et RAVISHANKAR, Jayashri. Peak-load management in commercial systems with electric vehicles. IEEE Systems Journal, 2018, vol. 13, no 2, p. 1872-1882.

[7] LI, Xiangjun, HUI, Dong, et LAI, Xiaokang. Battery energy storage station (BESS)-based smoothing control of photovoltaic (PV) and wind power generation fluctuations. IEEE transactions on sustainable energy, 2013, vol. 4, no 2, p. 464-473.

[8] UDDIN, Moslem, ROMLIE, M. F., ABDULLAH, M. F., et al. A novel peak shaving algorithm for islanded microgrid using battery energy storage system. Energy, 2020, vol. 196, p. 117084.

[9] BALAL, Afshin et GIESSELMANN, Michael. Demand-side management and economic analysis using battery storage system (bss) and solar energy. In : 2021 IEEE 4th international conference on power and energy applications (ICPEA). IEEE, 2021. p. 141-146.

[10] RAHIMI, Azar, ZARGHAMI, M., VAZIRI, M., et al. A simple and effective approach for peak load shaving using Battery Storage Systems. In : 2013 North American Power Symposium (NAPS). IEEE, 2013. p. 1-5.

[11] MAHMUD, Khizir, HOSSAIN, M. Jahangir, et TOWN, Graham E. Peak-load reduction by coordinated response of photovoltaics, battery storage, and electric vehicles. Ieee Access, 2018, vol. 6, p. 29353-29365.

[12] SHEN, Jingshuang, JIANG, Chuanwen, LIU, Yangyang, et al. A microgrid energy management system with demand response for providing grid peak shaving. Electric Power Components and Systems, 2016, vol. 44, no 8, p. 843-852.

[13] ATTOU, Nasreddine, ZIDI, Sid-Ahmed, KHATIR, Mohamed, et al. Energy Management System for Hybrid Microgrids. Electrotehnica, Electronica, Automatica, 2021, vol. 69, no 2, p. 21-30.

[14] ATTOU, Nasreddine, ZIDI, Sid-Ahmed, KHATIR, Mohamed, et al. Grid-Connected Photovoltaic System. In : ICREEC 2019. Springer, Singapore, 2020. p. 101-107.

Author address: N. Attou (Electrical Engineering Department Intelligent Control &Electrical Power SystemsLaboratory (ICEPS), Djillali Liabes University Sidi Bel-Abbes, Algeria),

Email:nasreddine.attou@univsba.dz